RoHS2.0&REACH Compliant

NOTES:
1.MATERIAL:
MOLDING: LCP UL94 V-0
CONTACT:COPPER ALLOY.
GOLD PLATED Min ON CONTACT AREA,100u"
Min TIN (LEAD FREE) ON SOLDER AREA,
SHELL: SUS304-H,T=0.30±0.03mm
50u" NICKEL PLATING OVER ALL.
SHILD:SUS304-H,T=0.12±0.03mm
2.MECHANICAL:
INSERTION: 5~20N.
EXTRACTION: 8~20N AFTER TEST.
DURABILITY: 10000 CYCLES
3.ELECTRICAL:
CURRENT: 5A FOR VBUS;
1.25A FOR GND PIN.
0.25A FOR OTHER.
VOLTAGE: 20 V MAX
WITHSTANDING VOLTAGE: 100V AC R.M.S.
CONTACT RESISTANCE: 40mΩ MAX.
INSULATION RESISTANCE: 100MΩ MIN.
4.ENVIRONMENTAL
TEMPERATURE RANGE -25°C ~ +85°C

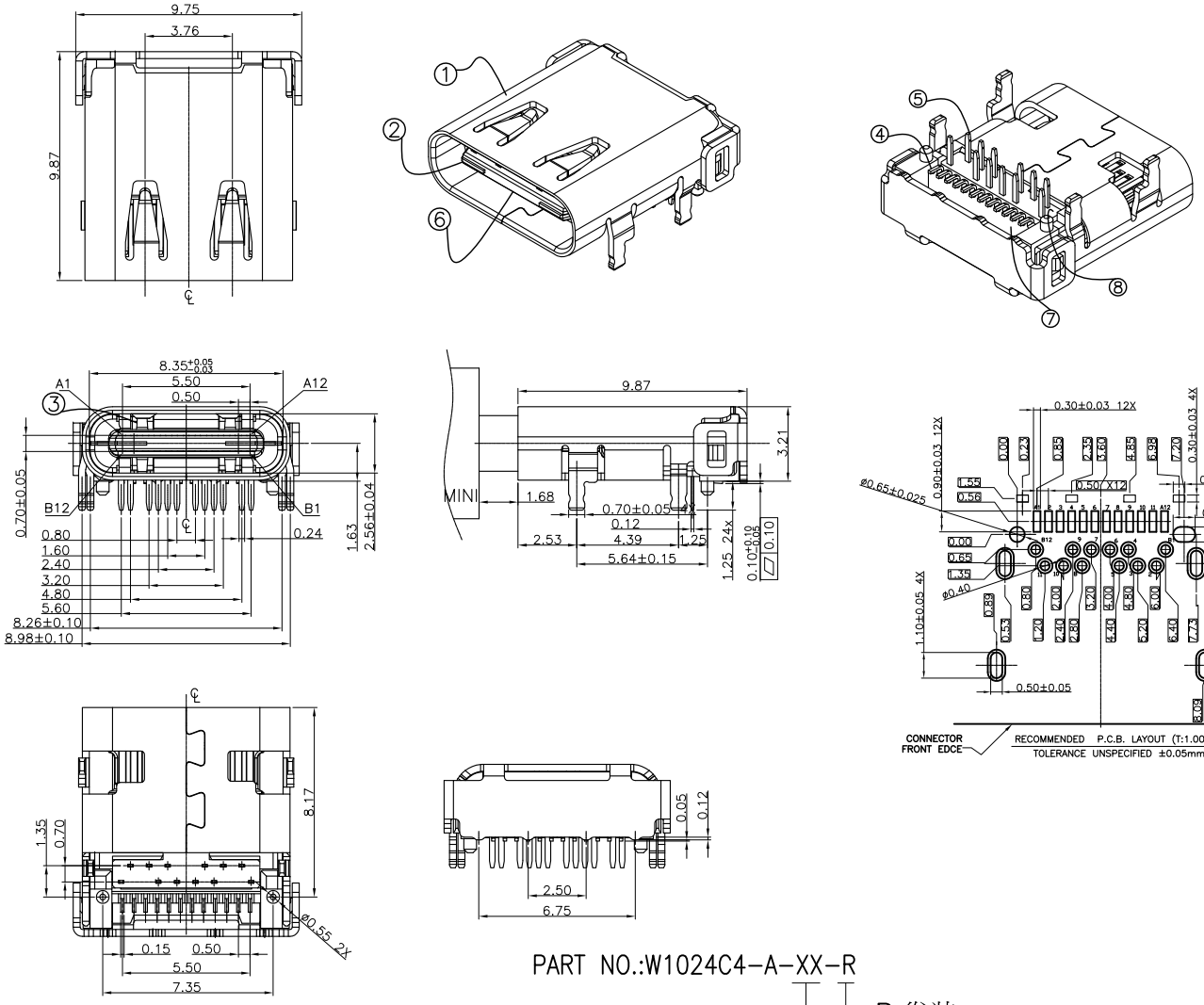

USB TYPE-C FULL-FEATURED RECEPTACLE INTERFACE PIN ASSIGNMENTS

PIN	Signal Name	Description	PIN	Signal Name	Description
A1	GND	Ground return	B12	GND	Ground return
A2	SSTXp1	Positive half of first SuperSpeed TX differential pair	B11	SSRXp1	Positive half of first SuperSpeed RX differential pair
A3	SSTXn1	Negative half of first SuperSpeed TX differential pair	B10	SSRXn1	Negative half of first SuperSpeed RX differential pair
A4	VBUS	Bus Power	B9	VBUS	Bus Power
A5	CC1	Configuration Channel	B8	SBU2	Sideband Use (SBU)
A6	Dp1	Positive half of the USB 2.0 differential pair-Position 1	B7	Dn2	Negative half of the USB 2.0 differential pair-Position 2
A7	Dn1	Negative half of the USB 2.0 differential pair-Position 1	B6	Dp2	Positive half of the USB 2.0 differential pair-Position 2
A8	SBU1	Sideband Use(SBU)	B5	CC2	Configuraation Channel
A9	VBUS	Bus Power	B4	VBUS	Bus Power
A10	SSRXn2	Negative half of second SuperSpeed RX differential pair	B3	SSTXn2	Negative half of second SuperSpeed TX differential pair
A11	SSRXp2	Positive half of second SuperSpeed RX differential pair	B2	SSTXp2	Positive half of second SuperSpeed TX differential pair
A12	GND	Ground return	B1	GND	Ground return

PART NO.:W1024C4-A-XX-R

R:卷装
T:盘装

Plating:
01:G/F 03:3U" 05:5U"
10:10U" 15:15U" 30:30U"

X. ± 0.35	APPD: Henry Sun	TITLE: USB C TYPE FEMALE DIP+SMT L9.87*W9.75*H3.21	泰康电子 TECONN
.X ± 0.25			
.XX ± 0.15	CHKD:		
.XXX±			
X° ± 2°	DR: Zhangjing	PART NO: W1024C4-A-XX-R	
.X° ± 1.5°			
	UNITS: mm	SCALE: 1:1	DWG NO: C-W1024C4-A-XX-R CUSTOMER DRAWING	SHEET:1OF2 REV: A

REV	ECN NO	DESCRIPTION	DATE
A	TE2017-XXXX	New Drawing	2017/05/28