THE PART MEETS TECONN "GP001" COMPLIANCE

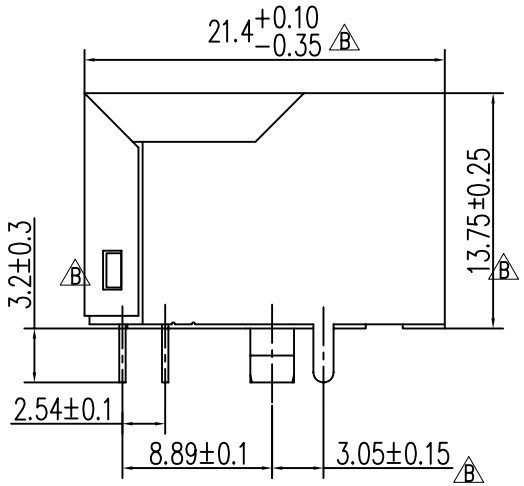

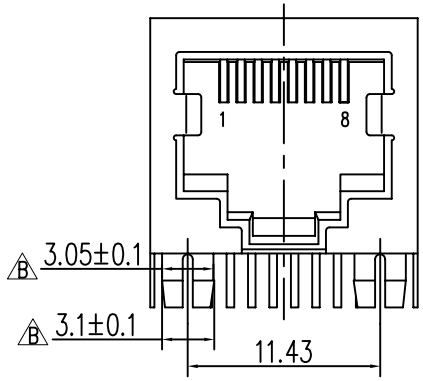

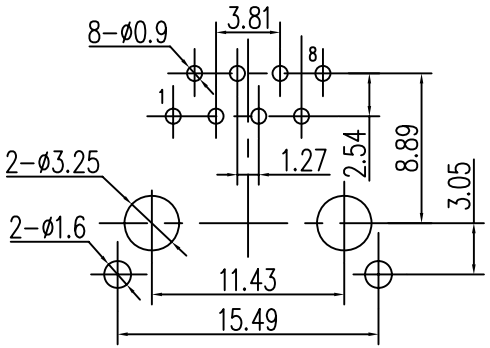

P.C.B. LAYOUT
TOLERANCE UNSPECIFIED: ±0.05mm B

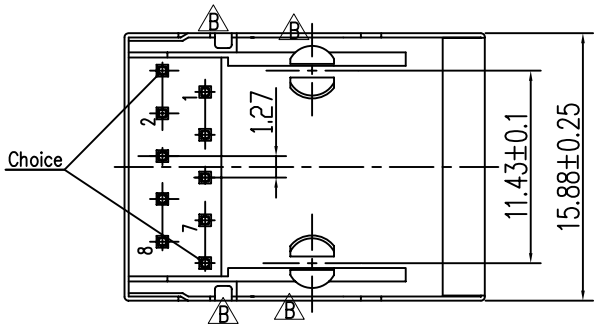

SPECIFICATIONS

CURRENT RATING: 1.5A
VOLTAGE RATING: 125V AC
INSULATION RESISTANCE: 500MΩ Min.
WITHSTAND VOLTAGE: AC 1500 V RMS 50Hz OR 60Hz 1 Min
CONTACT RESISTANCE: 20mΩ Max
INSERTION FORCE: 2 CONTACTS----350g 4 CONTACTS----500g
6 CONTACTS----750g 8 CONTACTS----900g
10 CONTACTS----1050g
RETENTION STRENGTH: 7.7Kg BETWEEN JACK AND PLUG
DURABILITY: 750 MATING CYCLES Min.
HOUSING: GLASS FILLED PBT (UL 94V-0)
SPRING WIRE: 0.45mm DIA PHOSPHOR BRONZE GOLD PLATING OVER NICKEL
SHIELDING: 0.24mm THICKNESS COPPER ALLOY WITH TIN PLATED
WORKING TEMPERATURE: −40℃~70℃
TOLERANCES UNLESS OTHERWISE SPECIFIED: 0~10±0.15、10~20±0.20、20~40±0.25 B

PART NO.:
W 030818-A-XX-T
Series
Pin No.
Flow No.
Packing: T: Tray
Plating: 01: G/F
05: Au5u" 15: Au15U"
30: Au30U"

REV	ECN NO	DESCRIPTION	DATE
B	TE2014-XXXX	Update Drawing	2014/03/16
A	TE2013-XXXX	New Drawing	2013/04/10

X. ± /	APPD: Henry	TITLE: RJ45	泰康电子 TECONN
.X ± /	CHKD:		
.XX ± /			
.XXX± /			
X° ± 2°	DR: Jcwen	PART NO: W030818-A-XX-T	
.X° ± /	UNITS: mm / SCALE: 1:1	DWG NO: C-W030818-A-XX-T (CUSTOMER DRAWING)	SHEET: 1 OF 1 / REV: B