ROHS Compliant&HF

THE PART MEETS TECONN "GP001" COMPLIANCE NEW REV.

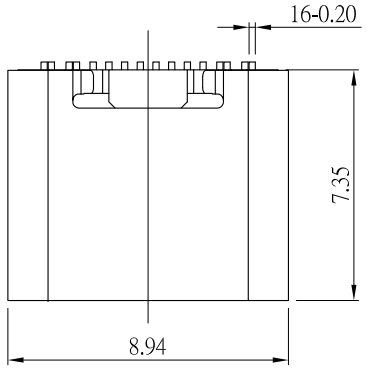

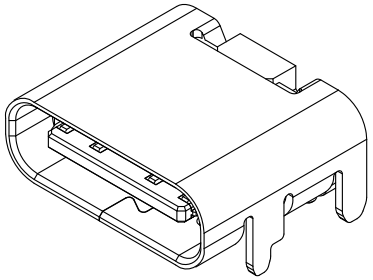

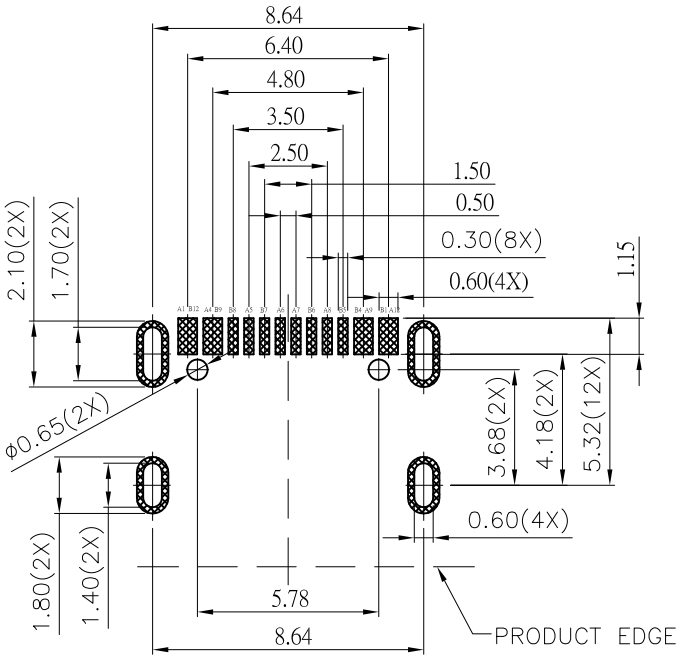

RECOMMENDED P.C.B LAYOUT

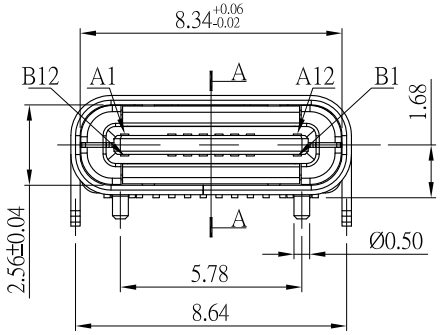

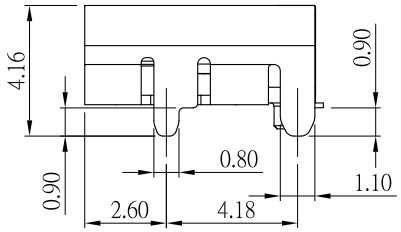

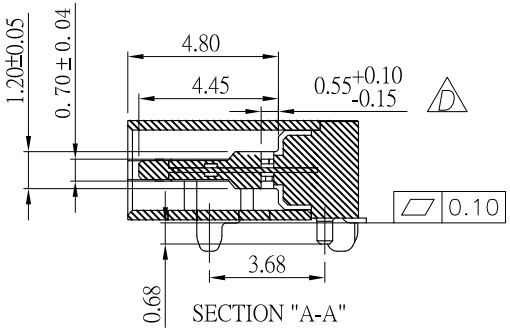

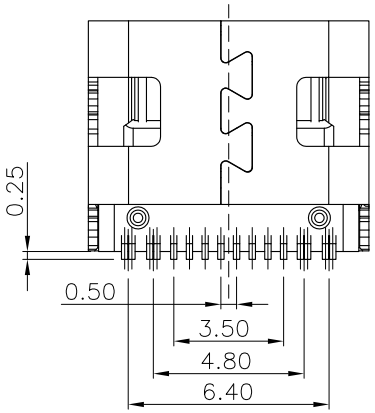

NOTE:

1.MATERIAL:
- 1.1 INSULATOR: LCP-E130I UL 94V-0;
- 1.2 CONTACT: C7025
- 1.3 SHELL:SUS 304

2.ELECTRICAL CHARACTERISTICS;
- 2.1 CONTACT RESISTANCE: 40mΩ Max FOR INITIAL. 30mΩ CHANGE AFTER TEST. MEASURE AT 20mV, 100mA.
- 2.2 CONTACT CURRENT RATING: 5A FOR VBUS PIN; 1.25A FOR VCONN PIN.
- 2.3 DIELECTRIC WITHSTANDING VOLTAGE: 100V AC R.M.S.
- 2.4 INSULATION RESISTANCE 100MΩ Min
- 2.5 OPERATING TEMPERATURE: -40°C ~ 85°C

3 MECHANICAL CHARACTERISTICS:
- 3.1 MATING FORCE: 5~20 N.
- 3.2 UNMATED FORCE: 8~20N AFTER TEST
- 3.3 DURABILITY: 10,000 CYCLES

4.PLATING
- 4.1 TERMINAL CONTACT: (SEE TAB) GOLD PLATING ALL OVER 50u" Min NICKEL AND 80u"Min Tin ALL OVER 50u" Min NICKEL ON SOLDER AREA
- 4.2 SHELL: 50u" Min. NICKEL ALL OVER,

USB TYPE-C PIN ASSIGNMENTS

PIN NUMBER	SIGNAL NAME	PIN NUMBER	SIGNAL NAME
A1	GND	B12	GND
A4	VBUS	B9	VBUS
A5	CC1	B8	SBU2
A6	Dp1	B7	Dn2
A7	Dn1	B6	Dp2
A8	SBU1	B5	CC2
A9	VBUS	B4	VBUS
A12	GND	B1	GND

Part No:

W 10 16 H9-X-XX-R

- Series
- Pin No
- Flow No
- Housing Color: A: Black B: White
- Packing: R:Reel
- Plating: 01: G/F; 05: Au 5u" 10: Au15u" 15: Au15u" 30: Au30u"

REV	ECN NO	DESCRIPTION	DESIGN	DATE
D	TE2019-0156	Update Drawing	Drex	2019/08/01
C	TE2018-0130	Update Drawing	Zhangjing	2018/11/15
B	TE2017-XXXX	Update Drawing	Zhangjing	2017/11/05
A	TE2016-XXXX	New Drawing	Xinxin	2016/05/05

X. ± 0.50	APPD: Henry Sun	TITLE: USB C TYPE母座 单排SMT 16 Pin.	泰康电子 TECONN
.X ± 0.30			
.XX ± 0.20	CHKD:		
.XXX±			
X. ±2.0°	DR: Zhangjing	PART NO: W1016H9-X-XX-R	
.X ±1.0°			
	UNITS: mm / SCALE: 1:1	DWG NO: C-W1016H9-X-XX-R	SHEET:1OF1 REV: D