THE PART MEETS TECONN "GP001" COMPLIANCE

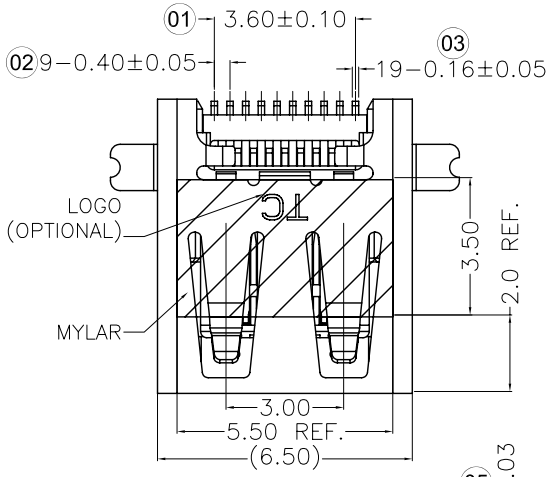

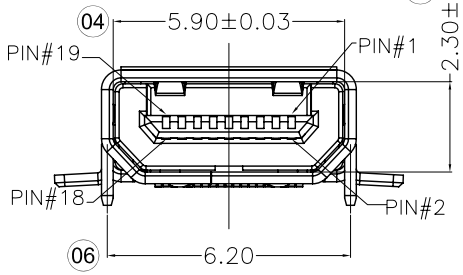

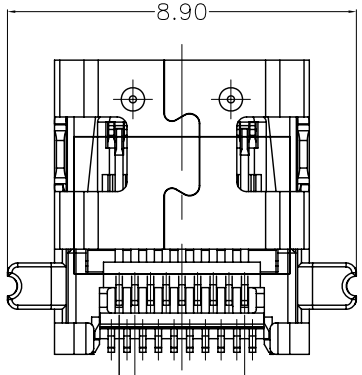

PIN	SIGNAL ASSIGNMENT
1	HOT PLUG DETECT
3	TMDS DATA2+
5	TMDS DATA2-
7	TMDS DATA1 SHIELD
9	TMDS DATA0+
11	TMDS DATA0-
13	TMDS CLOCK SHIELD
15	CEC
17	SCL
19	+5V Power

PIN	SIGNAL ASSIGNMENT
2	UTILITY
4	TMDS DATA2 SHIELD
6	TMDS DATA1+
8	TMDS DATA1-
10	TMDS DATA0 SHIELD
12	TMDS CLOCK+
14	TMDS CLOCK-
16	DDC/CEC GROUND
18	SDA

CONNECTION	SIGNALS
	TYPE D CONNECTOR
FIRST MAKE	CONNECTOR SHELL
SECOND MAKE	PINS 1-18
THIRD MAKE	PIN19(+5V POWER)

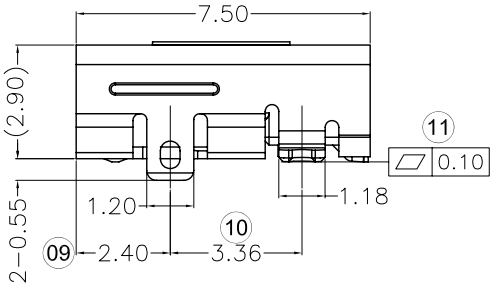

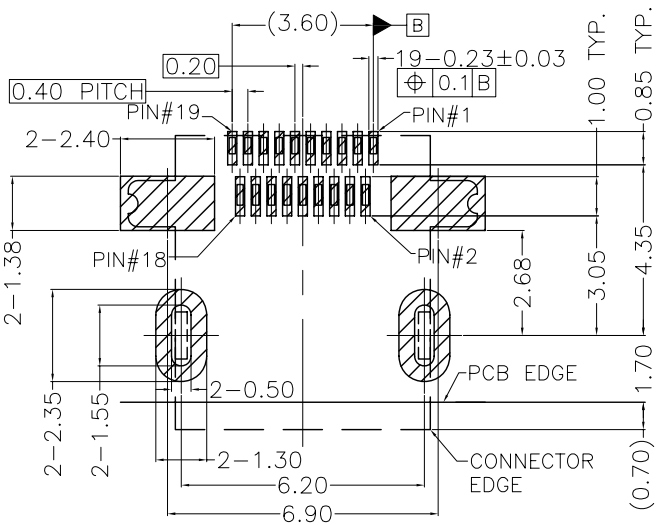

RECOMMENDED PCB LAYOUT
CONNECTOR SIDE(.XX±0.05)

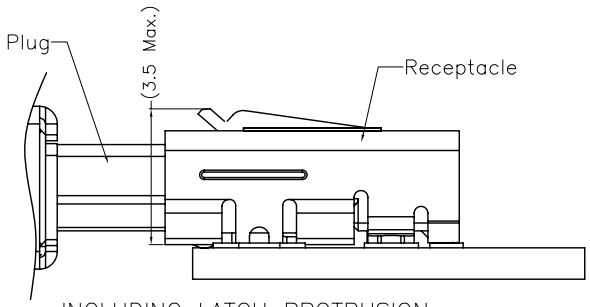

INCLUDING LATCH PROTRUSION
DURING MATING

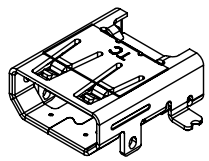

ITEM	TITLE	MATERIAL	DESCRIPTION	REMARK
1	TERMINAL	COPPER ALLOY C5210	CONTACT AREA:AU(SEE P/N); SOLDER AREA:AU 1U" MIN.	T=0.12
2	INSULATOR	LCP	UL94V-0	BLACK
5	SHELL	STAINLESS STEEL SUS304	PLATING:HALF-BRIGHT TIN	T=0.30
6	MYLAR		TRANSLUCENCY	1PC

NOTE:
1. CONTACT CURRENT RATING: 0.3 AMPERES.
2. VOLTAGE: 40 VAC MAXIMUM.
3. DIELECTRIC WITHSTANDING VOLTAGE:
   UNMATED CONNECTORS,APPLY: 250V AC(RMS.)
   MATED CONNECTOR,APPLY: 150V AC(RMS.)
4. CONTACT RESESTANCE: 10 MILLIOHMS MAXIMUM.
5. INSULATION RESISTANCE: 100 MEGOHMS MINIMUM.
6. OPERATING TEMPERATURE: -25°C~80°C.
7. INSERTION FORCE: 44.1N MAXIMUM.
8. WITHDRAWAL FORCE: 5~25N. AFTER 5,000 CYCLES MATING 3~25N.
9. PART NO.: A151901-A(B,C)-XX-R

SHELL LOGO TYPE:
A: "TC" LOGO
B: WITHOUT LOGO
C: TC LOGO + DATE CODE: XXXXX
YEAR:12,13... MONTH:01~12 WEEK:A,B,C...

Terminal Contact Area Plating:

01:	Au	1u"	03: Au 3u"
05:	Au	5u"	10: Au 10u"
15:	Au	15u"	30: Au 30u"

REV	ECN NO	DESCRIPTION	DATE
C	TE2013-XXXX	Updating Drawing	2013/03/06
B	TE2012-0351	Updating Drawing	2012/07/31
A	TE2010-492	New Drawing	2010/07/10

X. ± 0.35	APPD: Henry Sun	TITLE: HDMI TYPE D RECEPTACLE CONNECTOR	泰康电子 TECONN
.X ± 0.25			
.XX ± 0.15	CHKD:		
.XXX±			
X° ± 2°	DR: XIE MEI	PART NO: A151901-A(B,C)-XX-R	
.X° ± 1.5°			
	UNITS: mm / SCALE: 5:1	DWG NO: C-A151901-A(B,C)-XX-R / CUSTOMER DRAWING	SHEET:1OF1 / REV: C